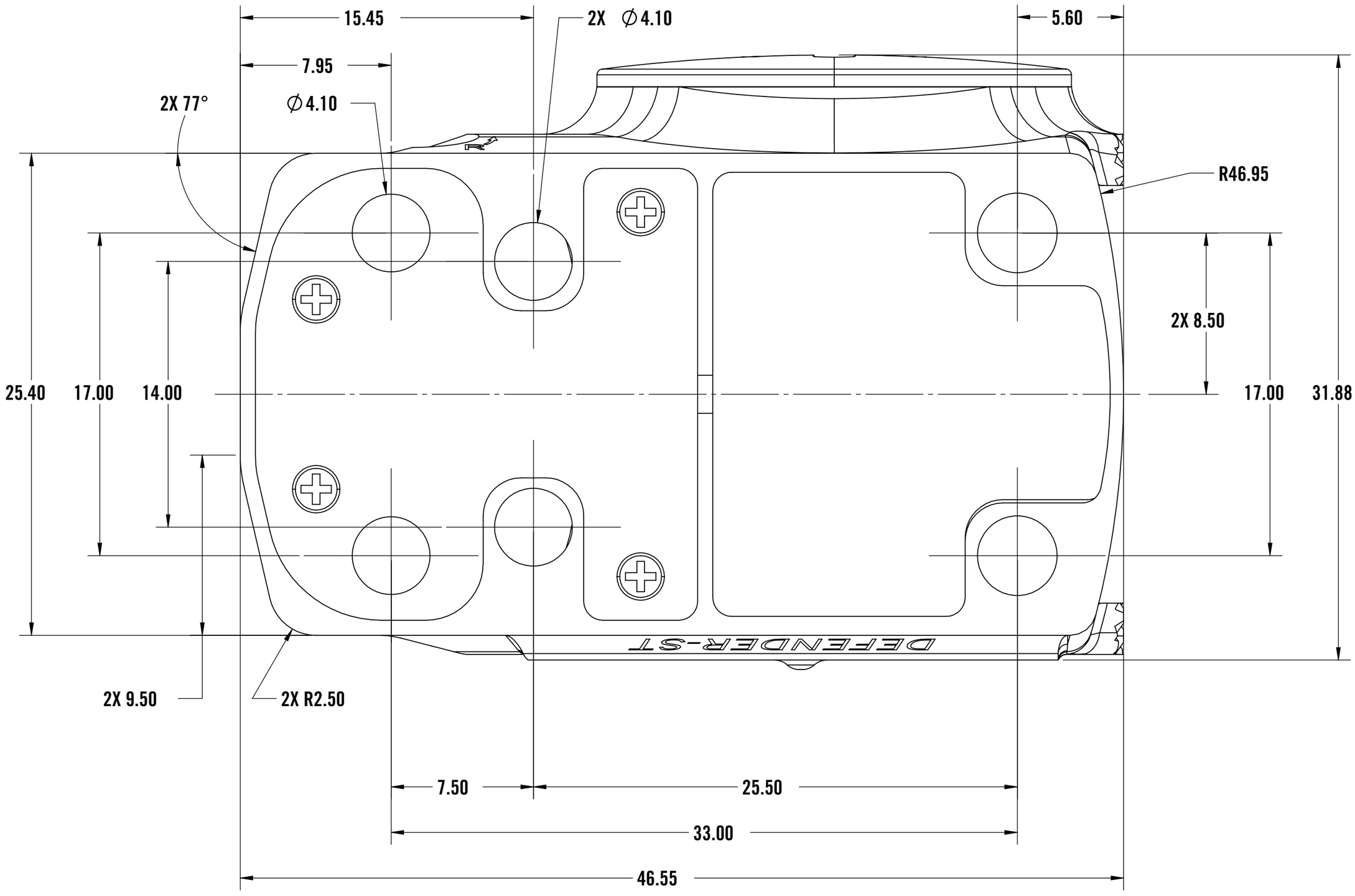DEFENDER-ST™
ENCLOSED SOLAR MICRO RED DOT